MEASURE CONNECTION HIGH, THREADED

H/L/M 29

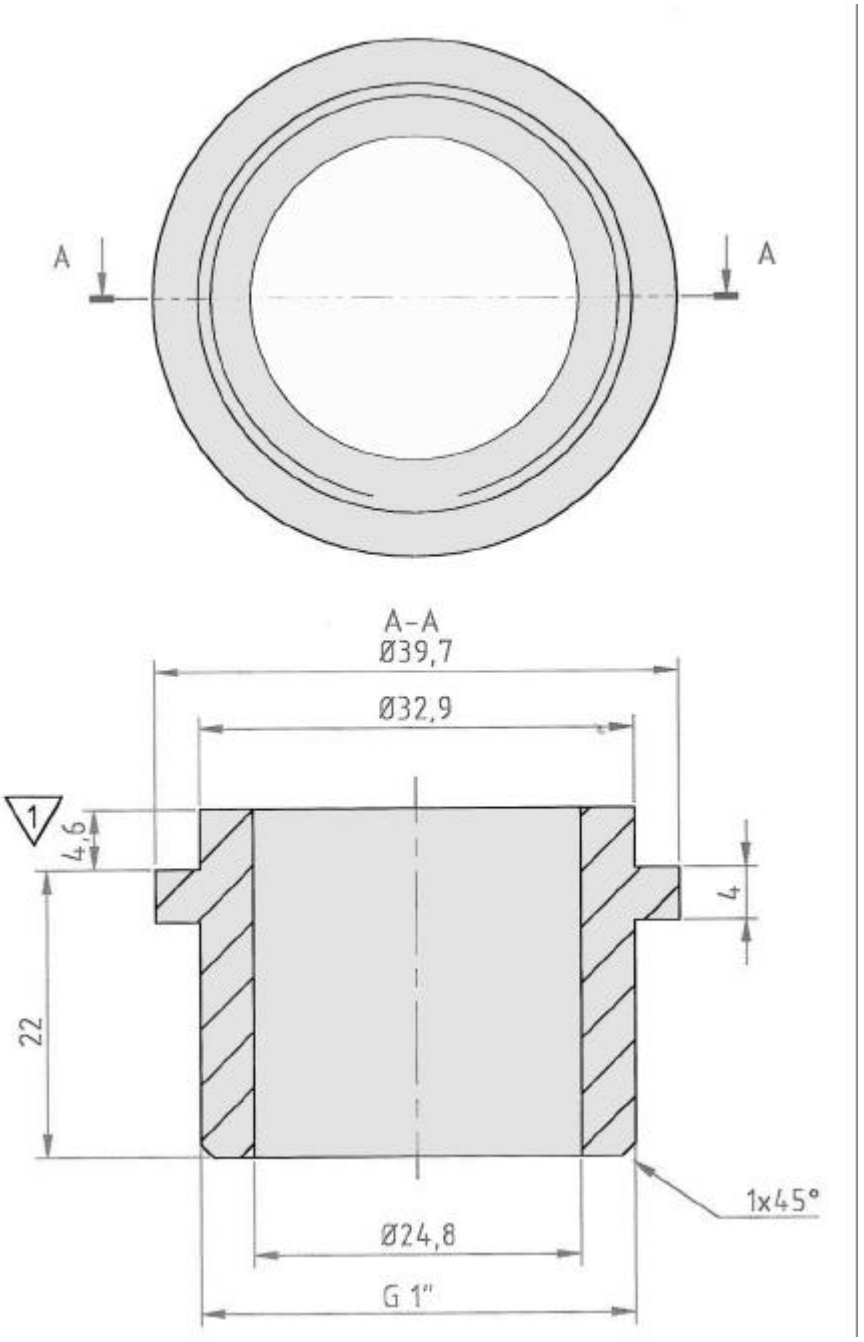

KELPIE AB • Hanögatan 5 • S-211 24 Malmö • Tel: +46-40-93 82 05 • Fax: +46-40-93 81 15 • http://www.kelpie.se • info@kelpie.se